Supplementary material

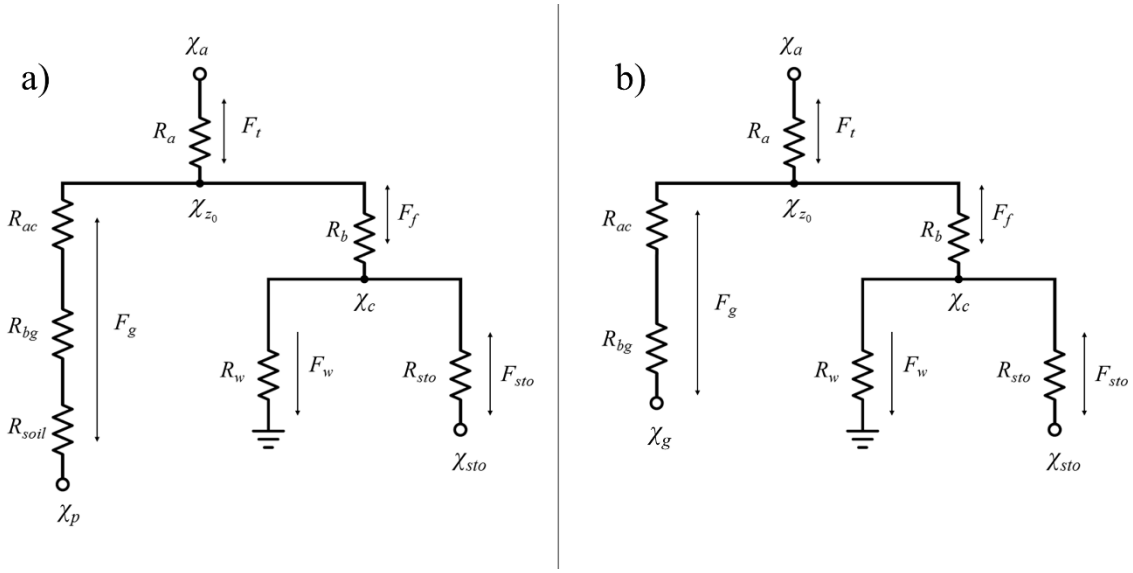

Figure S1. Resistance models applied for the simulation of the NH_3 exchange flux a) over the urine patches (as used in GAG_patch in Móring et al., 2016) and b) over the non-urine area (as suggested by Nemitz et al. 2001). The indicated resistances are: the aerodynamic resistance (R_a), the quasi-laminar resistance (R_b) over the canopy, aerodynamic resistance within the canopy (R_{ac}), quasi-laminar resistance at the ground (R_{bg}), soil resistance (R_{soil}), resistance to water and wax on the leaf surface (R_w) and stomatal resistance (R_{sto}). The gaseous NH_3 concentrations illustrated are: the ambient air concentration (χ_a), the canopy compensation point (χ_{z0}), the compensation point above the vegetation (χ_c), the compensation point in the model soil pore under a urine patch (χ_p), the stomatal compensation point (χ_{sto}) and the compensation point on the ground in the non-urine area (χ_g). The fluxes shown are: the total net exchange above the given canopy (F_t), the emission flux from soil (F_g), the exchange flux above the vegetation (F_f), the deposition flux to the leaf surface (F_w) and the stomatal flux (F_{sto}). For the definition of the resistances, fluxes and concentrations on Fig. a) and b, see Móring et al. (2016) and Section 3.1 in the present study, respectively.

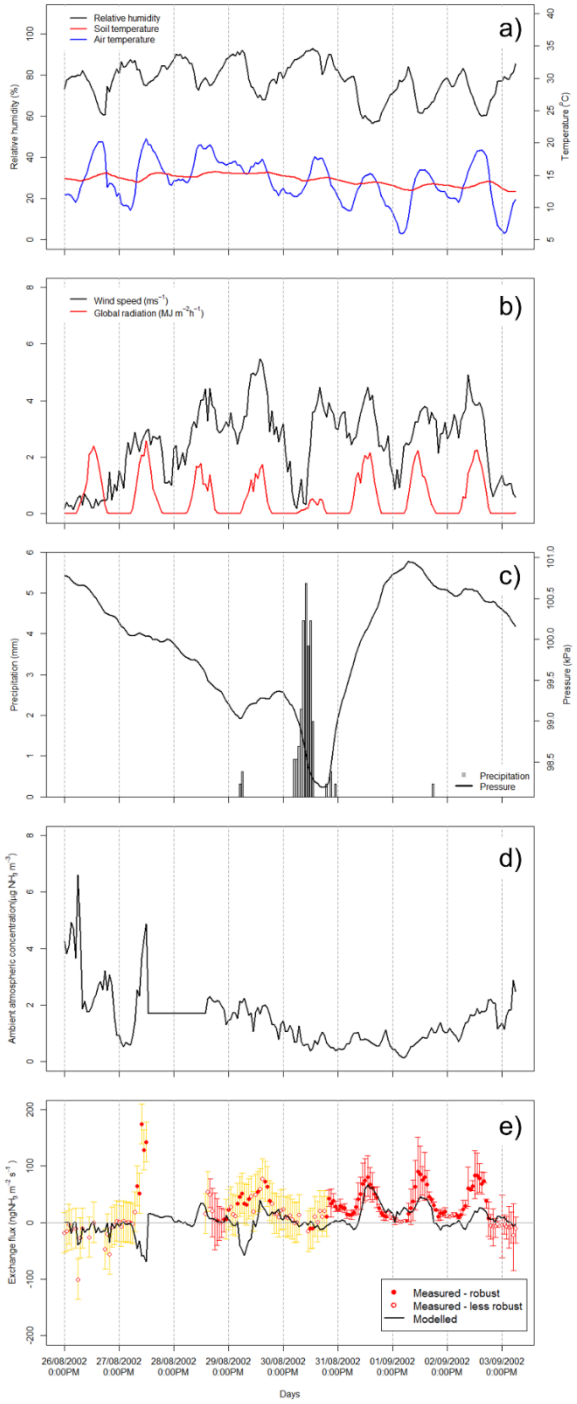

Figure S2. Measured meteorological variables (relative humidity, soil and air temperature (a), wind speed and global radiation (b), precipitation and surface pressure (c)), the measured ambient atmospheric concentration of NH_3 (d) and the measured and simulated hourly NH_3 fluxes (e) in P2002 in Easter Bush as plotted in Fig. 9a.

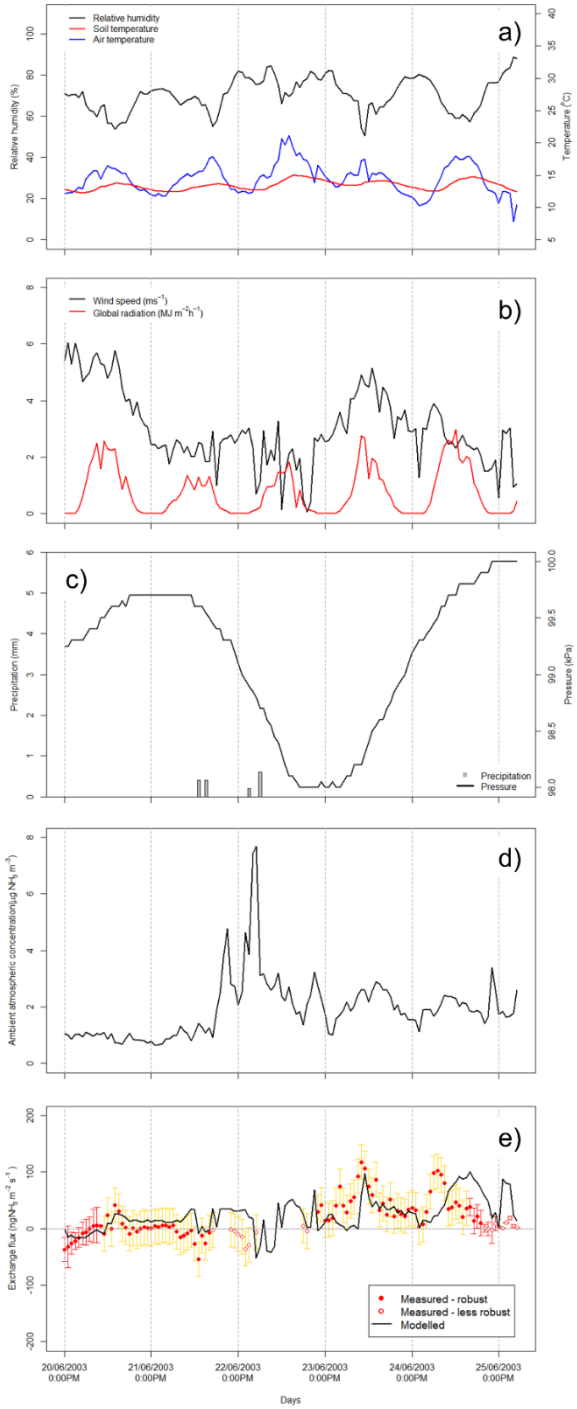

Figure S3. Measured meteorological variables (relative humidity, soil and air temperature (a), wind speed and global radiation (b), precipitation and surface pressure (c)), the measured ambient atmospheric concentration of NH_3 (d) and the measured and simulated hourly NH_3 fluxes (e) in P2003 in Easter Bush as plotted in Fig. 9b.

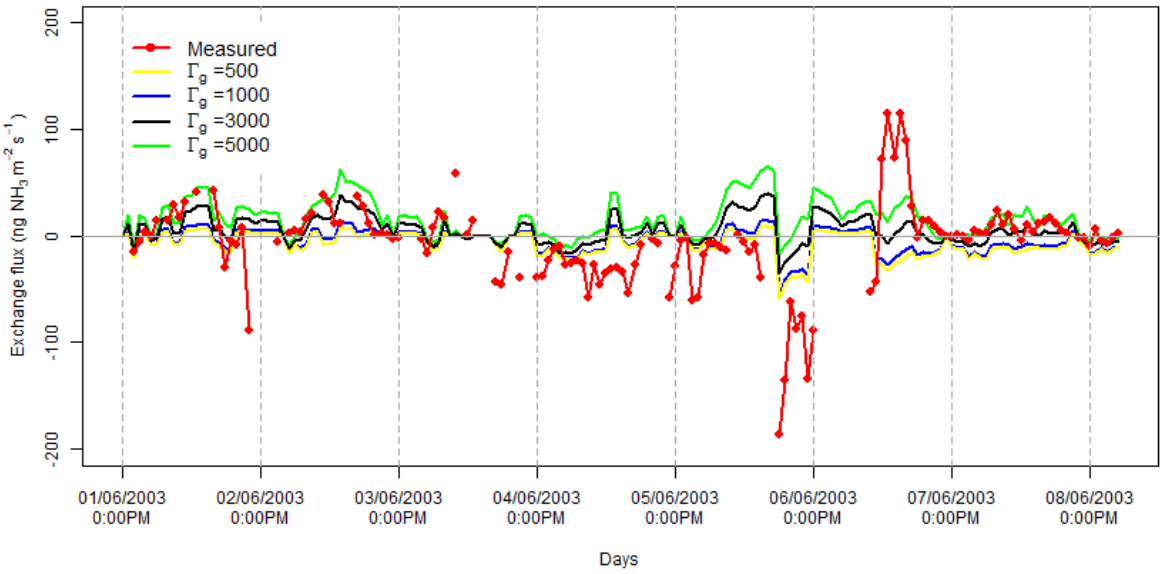

Figure S4: Model results for the calibration period with GAG_field, using different values for the soil emission potential (Γ_g).